Tools Required:

- 3mm hex screw driver

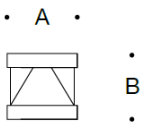

Dimensions

A: 5-1/2”

B: 5-1/2”



Overview:

LED Watts: 6.0W
System Watts: 11.0W
Controllability: 0-10V dimmable
Weight: 4.4lbs.
Protection Class: IP65

Notice to Installer for 99 852:

1. See page 2 for specific product safety warnings.
2. Fixture may be damaged if connected to conduit systems that contain water - Article 300-5G of the National Electric Code requires that “Conduits or raceways through which moisture may contact energized live parts shall be sealed or plugged at either or both ends.”
3. Wet location listing does not imply suitability for exposure to standing water for long periods of time.
4. Supply wiring connection are made to 2 pole and 3 pole wire connectors in accompanying bollard tube. Refer to bollard tube installation instructions for wiring instructions.
5. Bollard head is rotatable on bollard tube.

NOTE: For proper installation, an accompanying bollard tube must be selected with the bollard head.

99 852 installation to aluminum system bollard tube:

1. Install bollard tube per bollard tube installation instructions.
2. Connect all 5 wires from the bollard head to the correct intended wire from the bollard tube as described in the bollard tube installation instructions, using provided wire connectors.
3. Insert bollard head into bollard tube and turn clockwise as far as it will go (Figure 1).
4. Secure bollard head by tightening (1) 3mm hex head set screw located on the tube.
5. Complete additional installation steps for system bollard tube as applicable.

99 852 installation to wood system bollard tube:

1. Route luminaire head flexible conduit with wiring through wood bollard tube to the base.
2. Insert bollard head into wood bollard tube and turn clockwise until it stops (Figure 1).
3. Secure bollard head by tightening (1) 3mm hex head set screw located on side of wood bollard tube.
4. Complete bollard tube installation by following installation instructions for wood system bollard tube as applicable.

Figure 1: Head installation

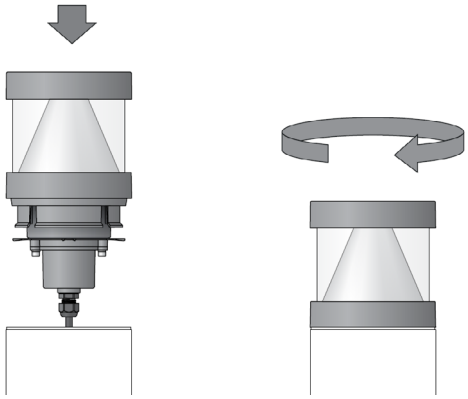

Accessories

Please refer to the appropriate accessory installation sheet for further instruction when applicable.

Maintenance:

Clean regularly with solvent-free cleaner removing dirt and debris. Do not use high pressure cleaners.

Replacement Parts

See label inside of fixture for LED replacement part number.

Consult factory for all other replacement components.

 © copyright BEGA 2026
Due to the dynamic nature of lighting products and the associated technologies, luminaire data on this sheet is subject to change at the discretion of BEGA North America. For the most current technical data, please refer to bega-us.com

Product Safety Warnings:

THIS PRODUCT MUST BE INSTALLED IN ACCORDANCE WITH THE APPLICABLE INSTALLATION CODE BY A PERSON FAMILIAR WITH THE CONSTRUCTION AND OPERATION OF THE PRODUCT AND THE HAZARDS INVOLVED.
SUITABLE FOR WET LOCATIONS.
MIN 90°C SUPPLY CONDUCTORS.

CE PRODUIT DOIT ÊTRE INSTALLÉ SELON LE CODE D'INSTALLATION PERTINENT, PAR UNE PERSONNE QUI CONNAÎT BIEN LE PRODUIT ET SON FONCTIONNEMENT AINSI QUE LES RISQUES INHÉRENTS.
CONVIENT AUX EMPLACEMENTS MOUILLÉS.
LES FILS D'ALIMENTATION 90°C MIN.

 © copyright BEGA 2026
Due to the dynamic nature of lighting products and the associated technologies, luminaire data on this sheet is subject to change at the discretion of BEGA North America. For the most current technical data, please refer to bega-us.com